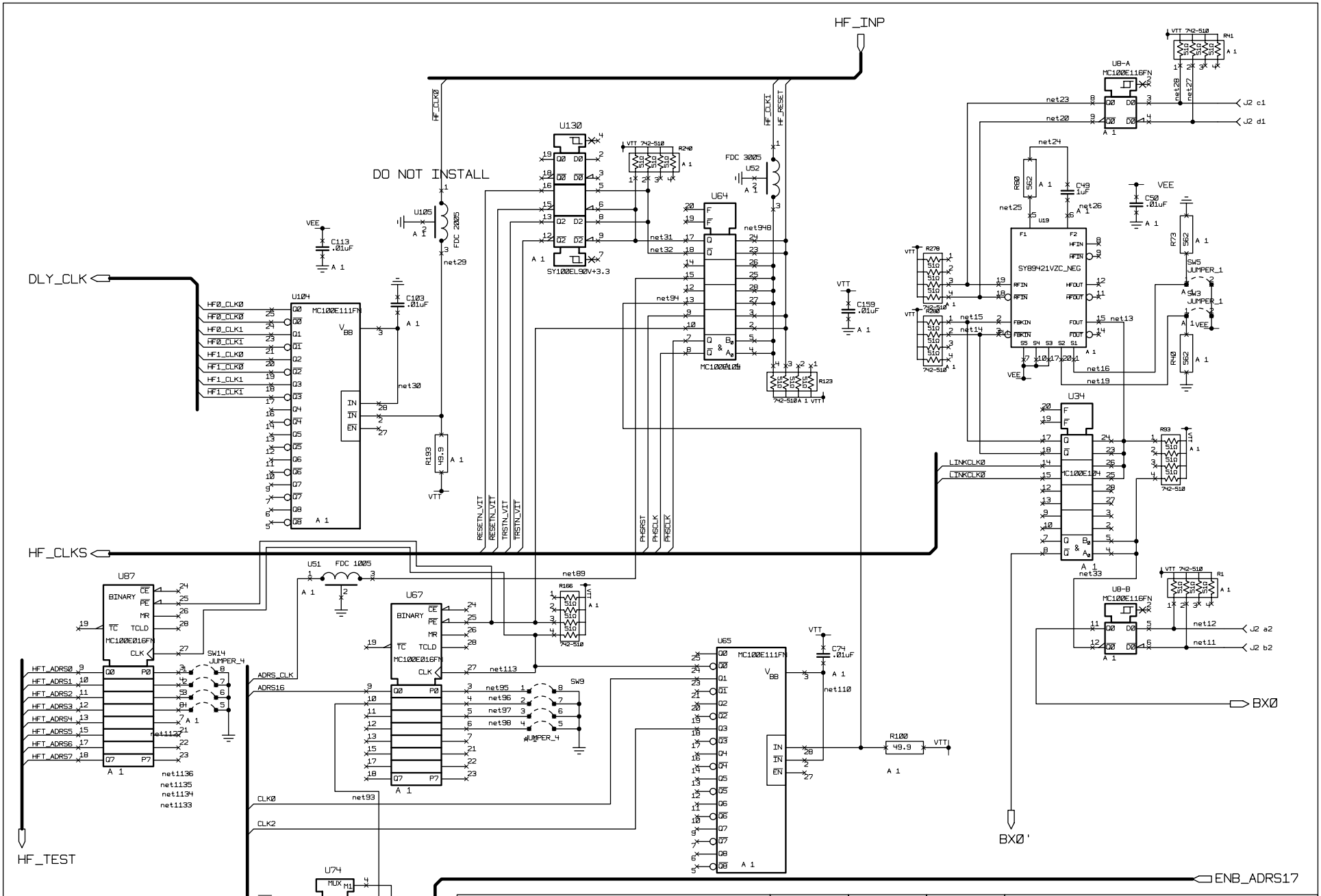

Changes	By	Date	Drawn JLL	Project CMS CAL TRIGGER PROCESSOR
			Date 15/2/02	JETSUM CARD
			CHK'D	BLOCK: HF_CLKS
			Scale	High Energy Physics
			C 0849	University of Wisconsin